REV	DATE	DRAWN BY	APPRV'D BY	DESCRIPTION

Colors indicate function residing on mother board

Yellow coded blocks are located on RF Chassis

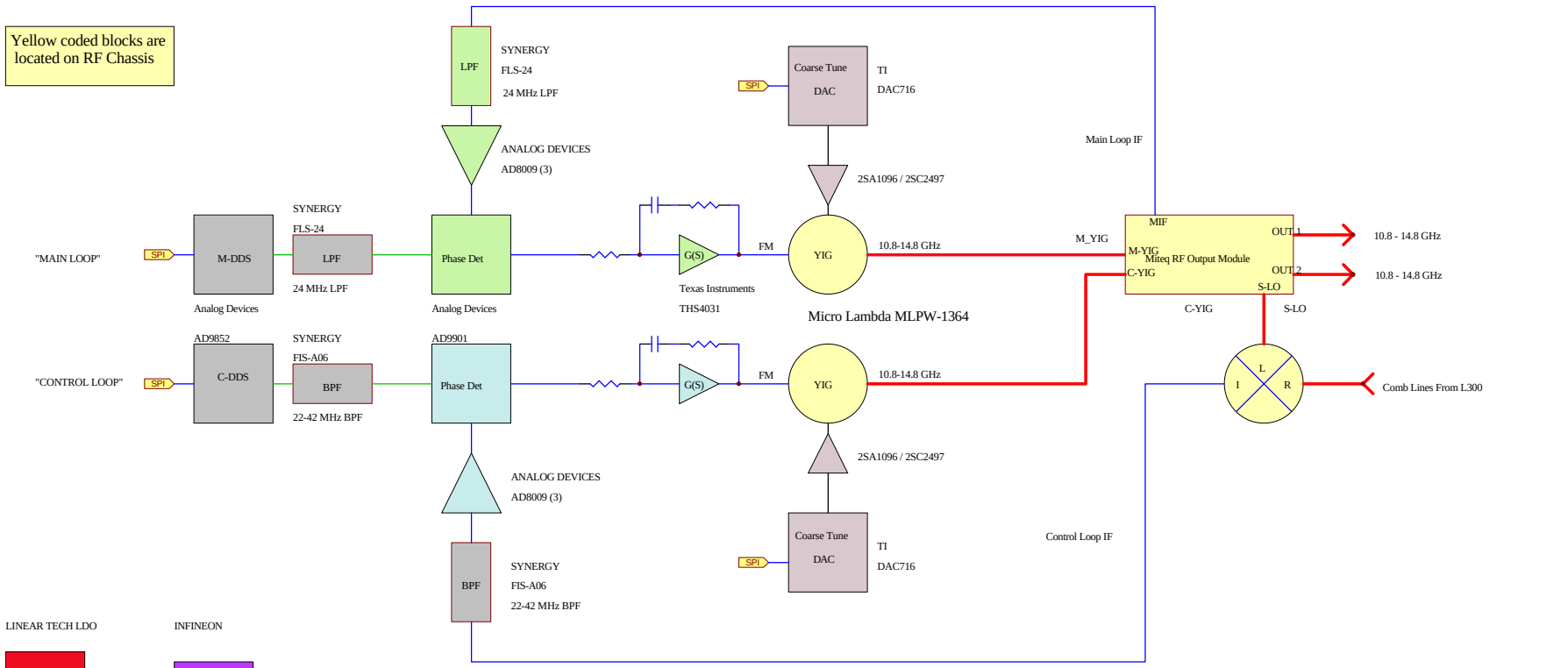

LINEAR TECH LDO

PS REG

INFINEON

MIB

SPI

ANALOG DEVICES

TLV2556

MONITOR

XYLINX

DDS LOGIC

128 MHz

SPI

TIMING

PROTEL : Production_L302_BLOCK.sch

NEXT ASSEMBLY	DWG. TYPE

UNLESS OTHERWISE SPECIFIED:

All Resistances are in Ohms
All Capacitances are in microfarads
Component tolerances are 5%

EVLA

PROJECT

{project line 1}

{project line 2}

TITLE

L302 Local Oscillator Block Diagram

Production Version

NATIONAL RADIO ASTRONOMY OBSERVATORY

SOCORRO, NEW MEXICO 87801

DRAWN BY J. Muehlberg	DATE
DESIGNED BY S. Wetenkamp	DATE
APPROVED BY T. Cotter	DATE

SHEET NUMBER	DRAWING NUMBER	REV.	SCALE
1 OF 1	C23010K0010	1.0	