REV	DATE	DRAWN BY	APPRV'D BY	DESCRIPTION

Colors indicate function residing on mother board

Yellow coded blocks are located on heatsink

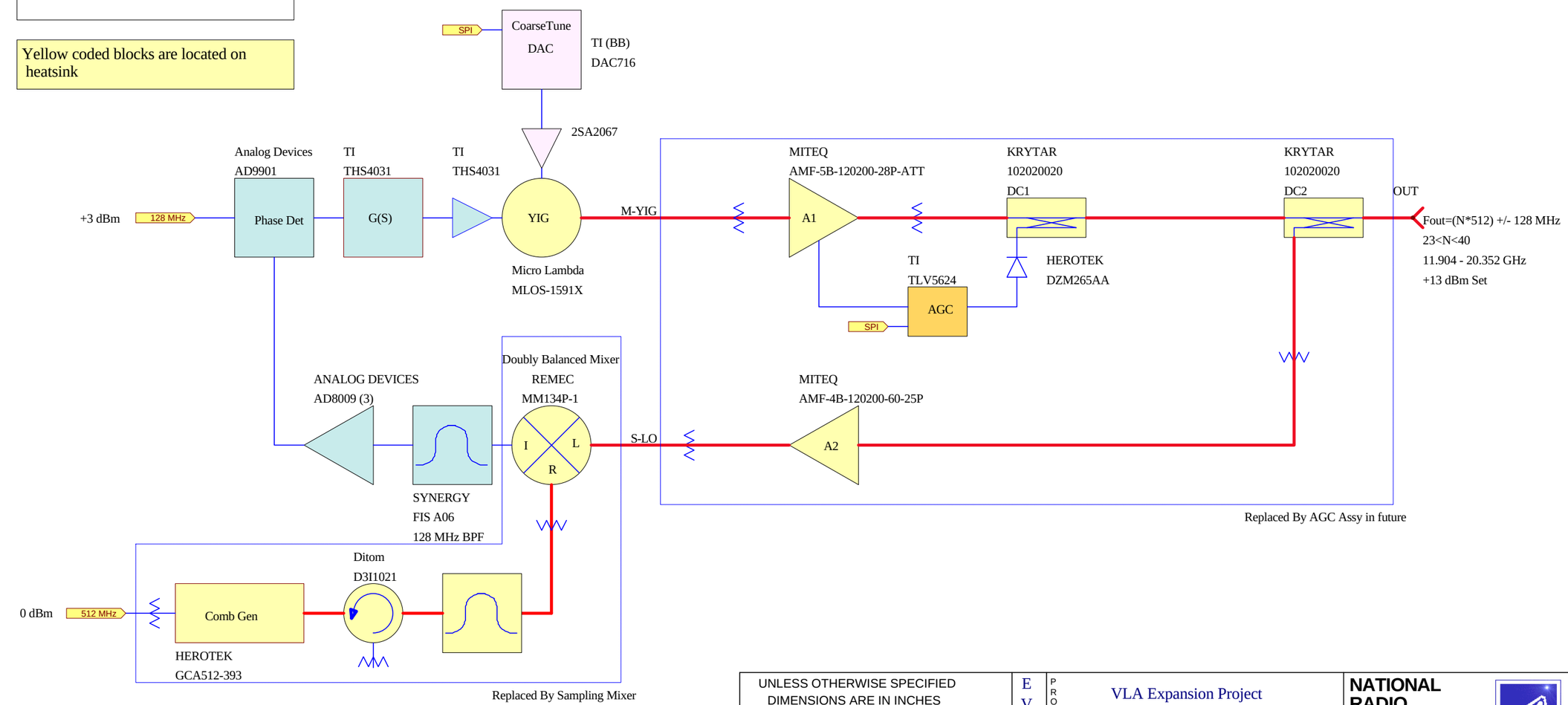

INFINEON — MIB (SPI)

LINEAR TECH LDO — PS REG

ANALOG DEVICES TLV2556 — MONITOR

PROTEL : L301_BLOCK.sch

NEXT ASSEMBLY	DWG. TYPE

UNLESS OTHERWISE SPECIFIED DIMENSIONS ARE IN INCHES

TOLERANCES : ANGLES %%P
4 PLACE DECIMALS (.XXXX) %%P
3 PLACE DECIMALS (.XXX) %%P
2 PLACE DECIMALS (.XX) %%P
1 PLACE DECIMALS (.X) %%P

MATERIAL :

FINISH :

EVLA — PROJECT: VLA Expansion Project, Antenna Electronics

TITLE: L301 12-20 GHz Synthesizer Block Diagram

Coaxial Version

NATIONAL RADIO ASTRONOMY OBSERVATORY
SOCORRO, NEW MEXICO 87801

DRAWN BY J. Muehlberg	DATE 13-Oct-2004
DESIGNED BY J. Muehlberg	DATE 15-Jan-2003
APPROVED BY	DATE

SHEET NUMBER	DRAWING NUMBER	REV.	SCALE
1 OF 1	C2301K0009	P1.0	