Front End Issues

Paul Lilie

Front End Issues

- Ortho-Mode Transducers (“OMTs”)
- Solar Observing
- Receiver Schedule

Front End Issues: OMTs

Octave Bandwidth Quad-Ridge OMT & 90° Hybrid for L, S, and C-bands

Four-Probe Design for X-band

Boiföt OMT & Phase Shifter for Ku, K, Ka-bands

Sloping Septum for Q-band

Quad-Ridge OMT HFSS Model

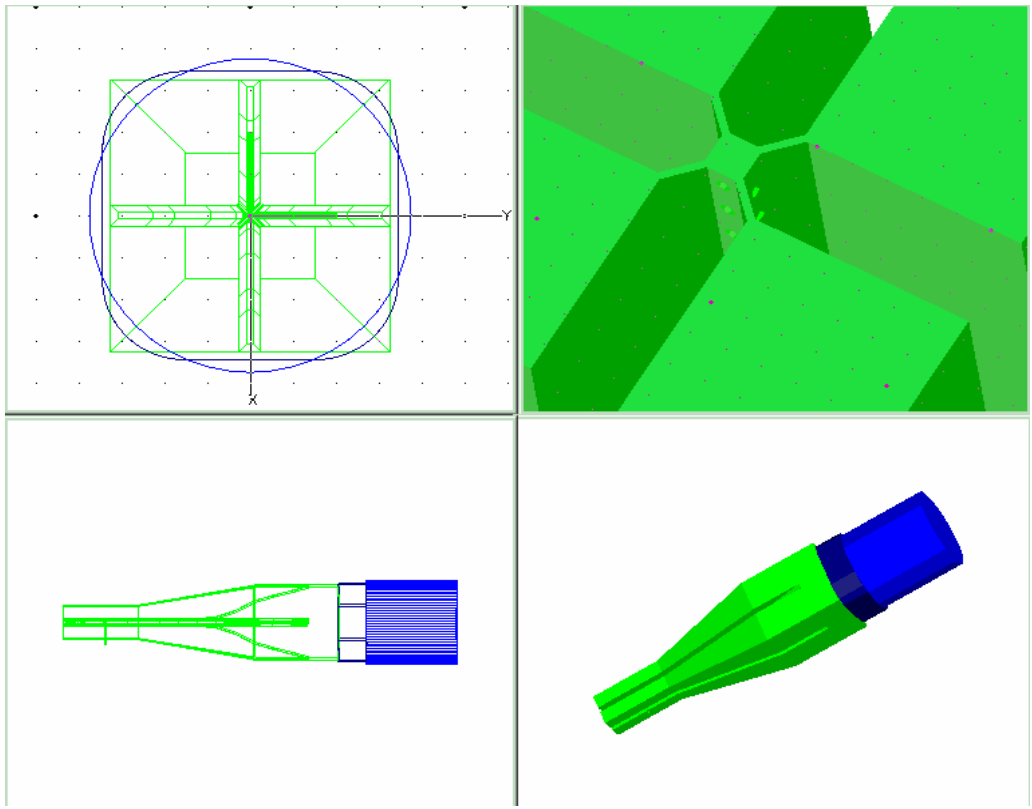

Quad-Ridge OMT Simulation

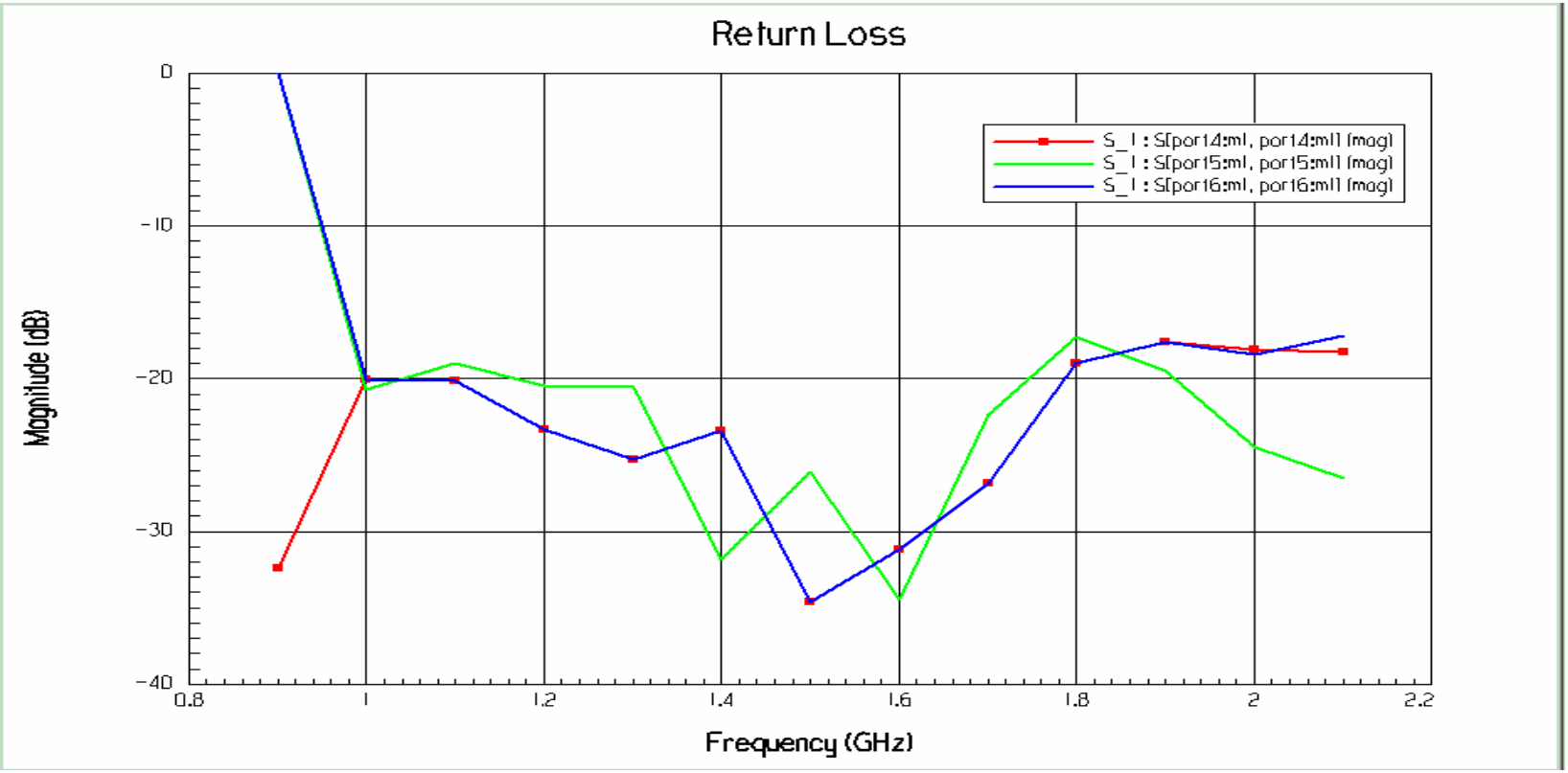

Quad-Ridge OMT Simulation

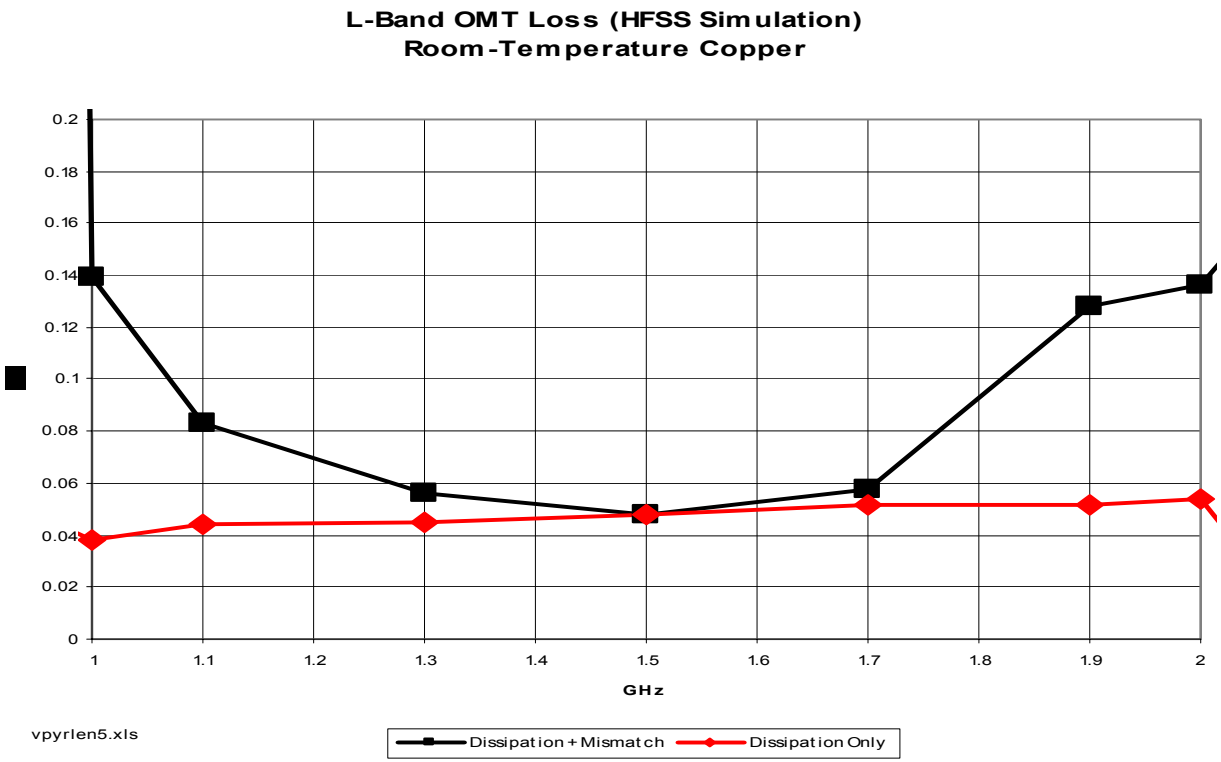

Quad-Ridge OMT Simulation

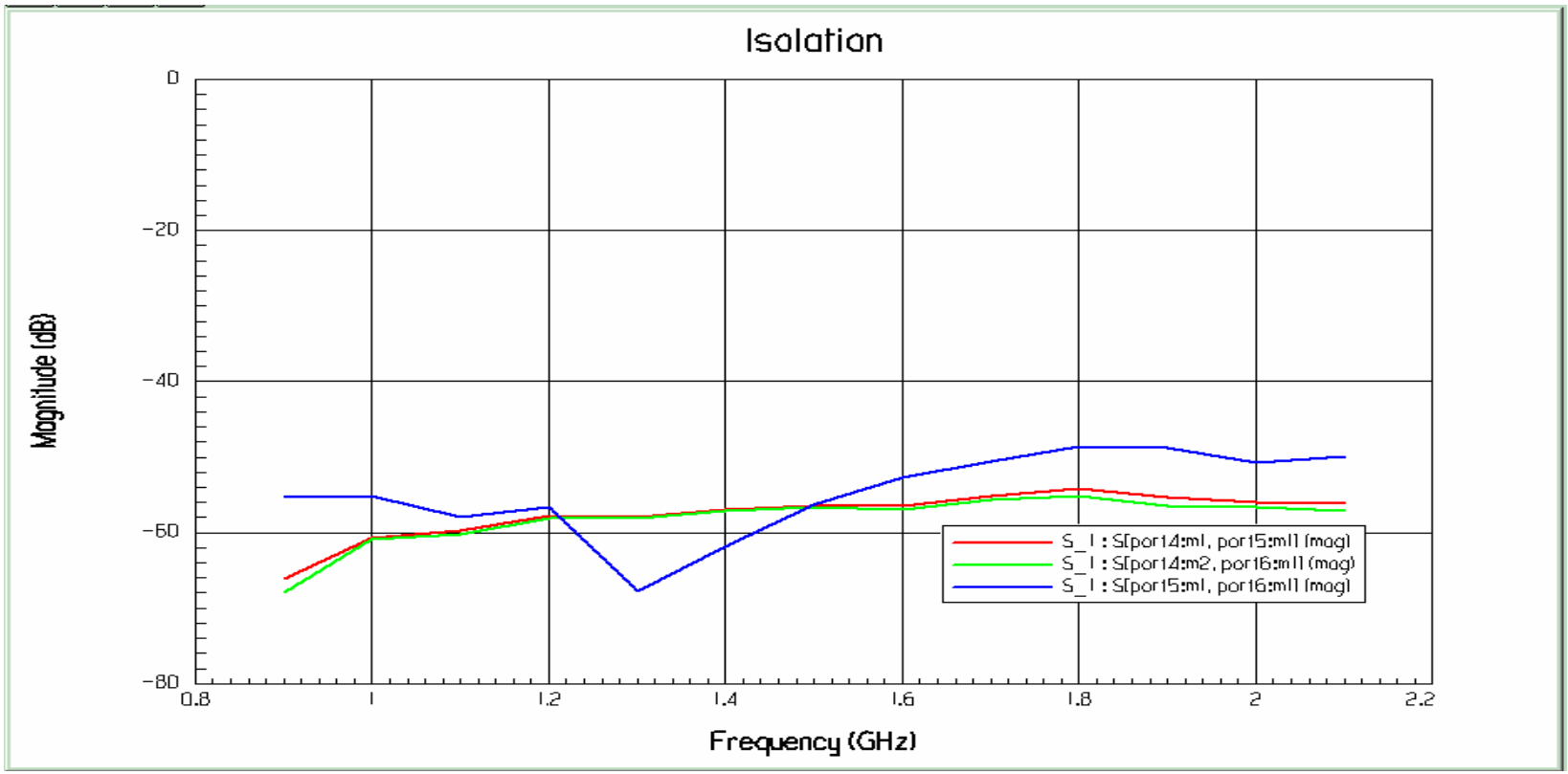

4-Probe OMT HFSS Model

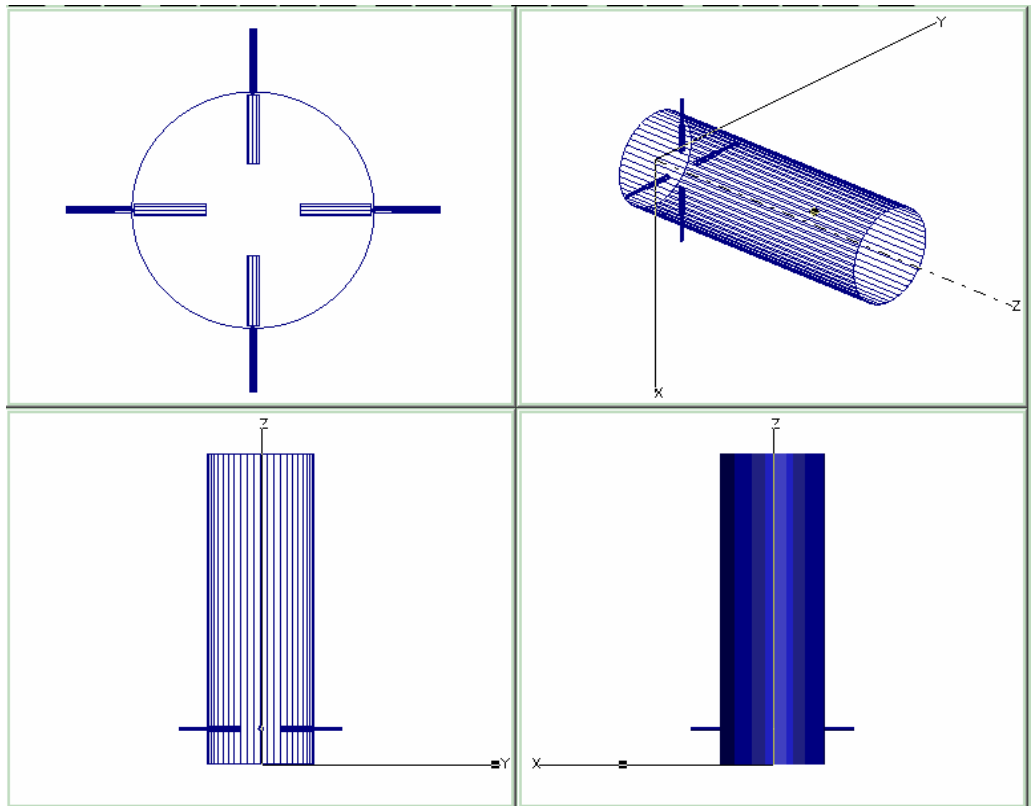

4-Probe OMT Simulation

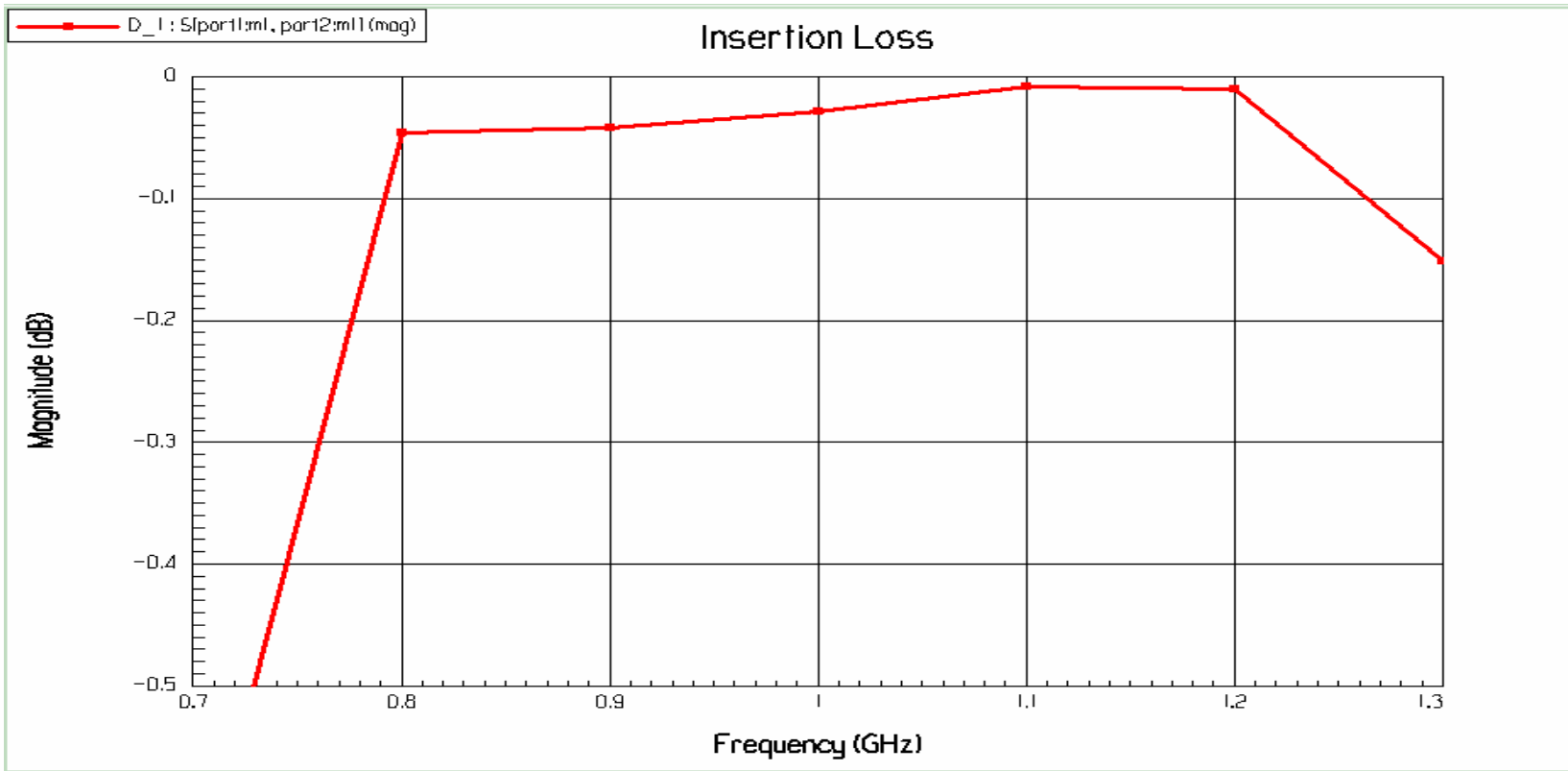

4-Probe OMT Simulation

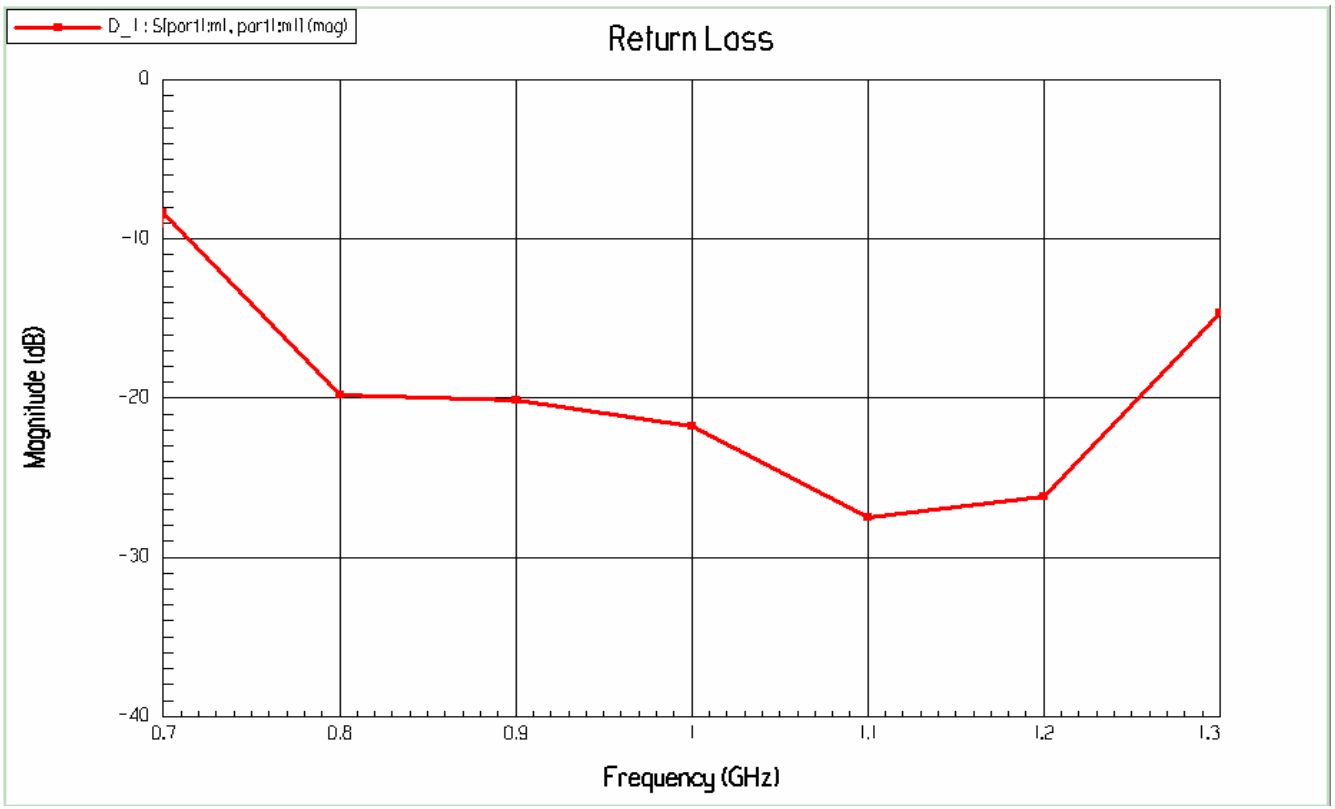

Solar Observing "Coupler-Fed"

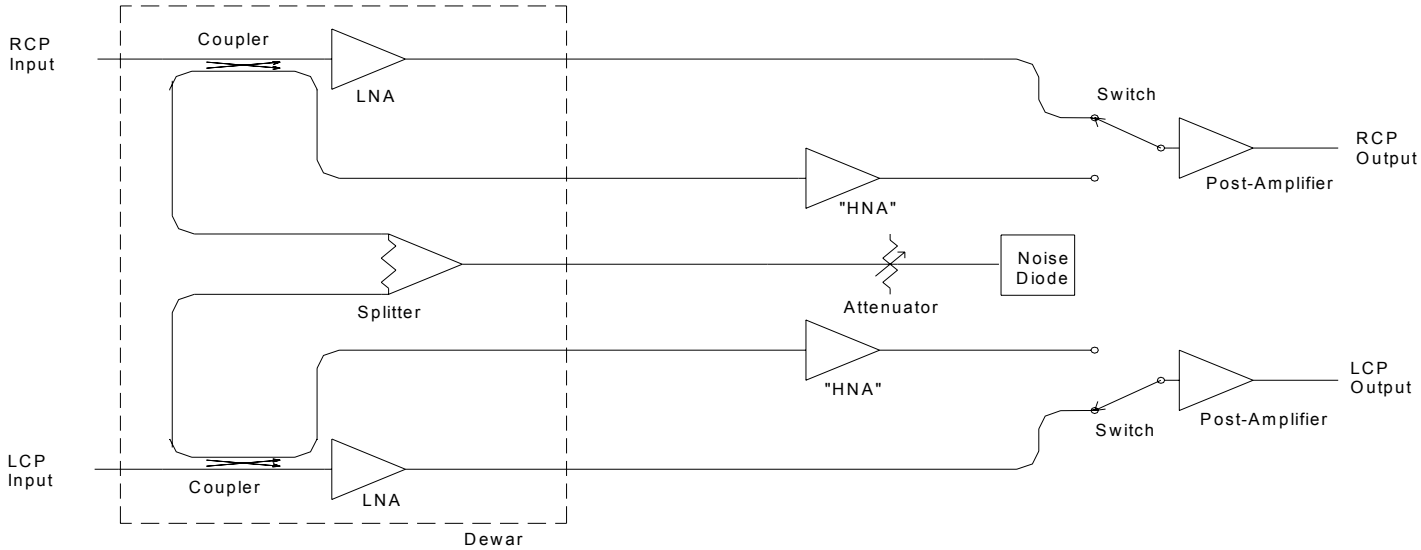

Solar Observing Signal/Noise Ratio

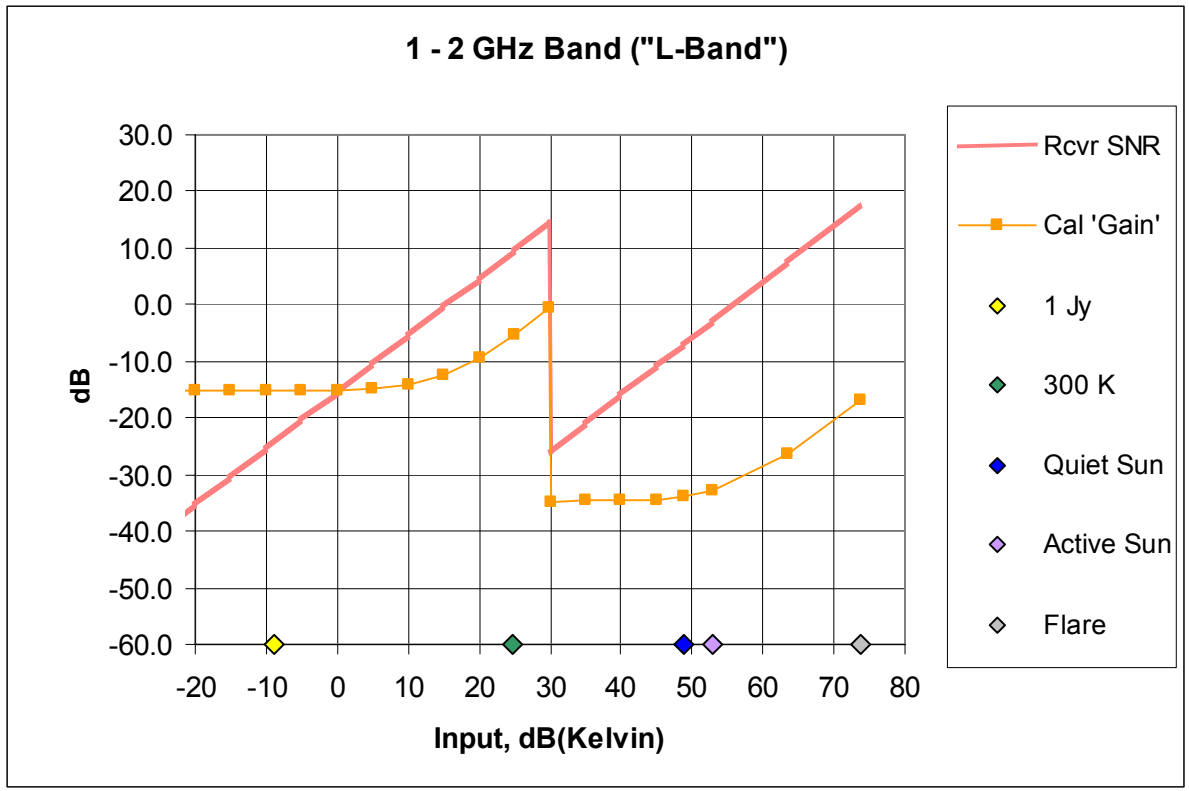

Receiver Schedule

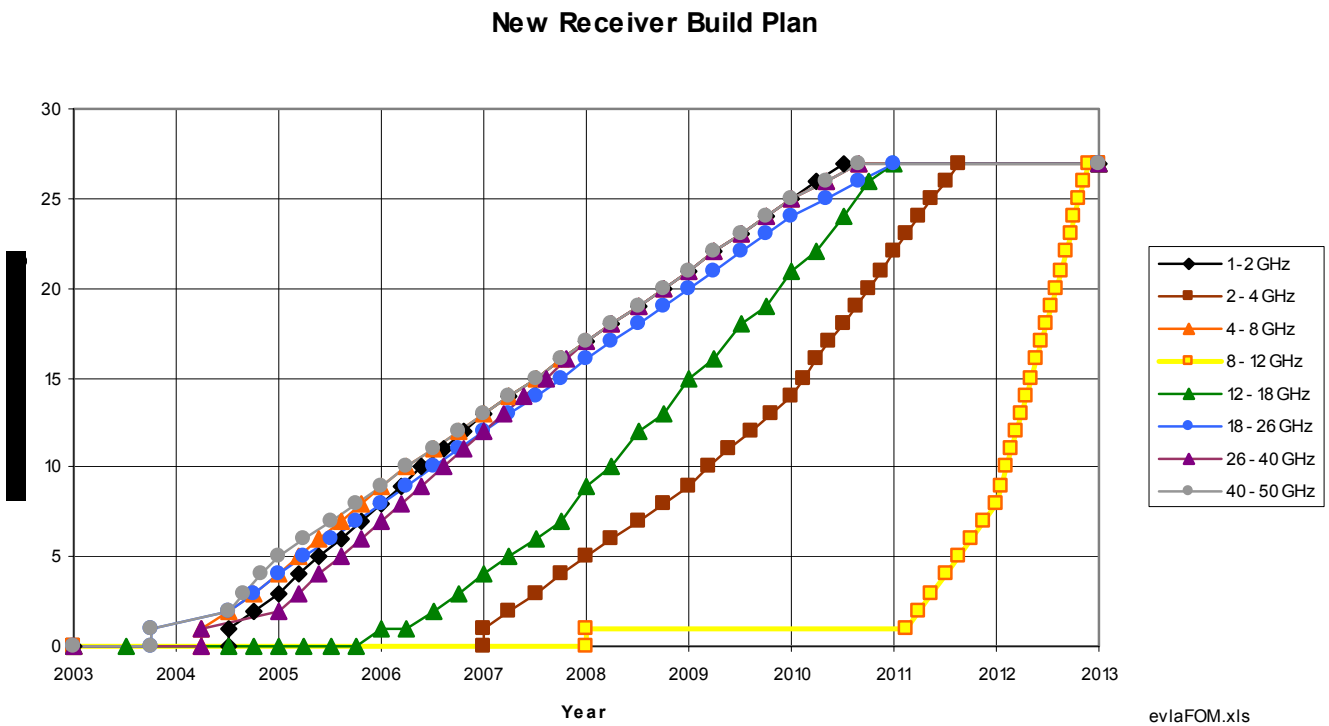

Receiver Schedule Ku-Band

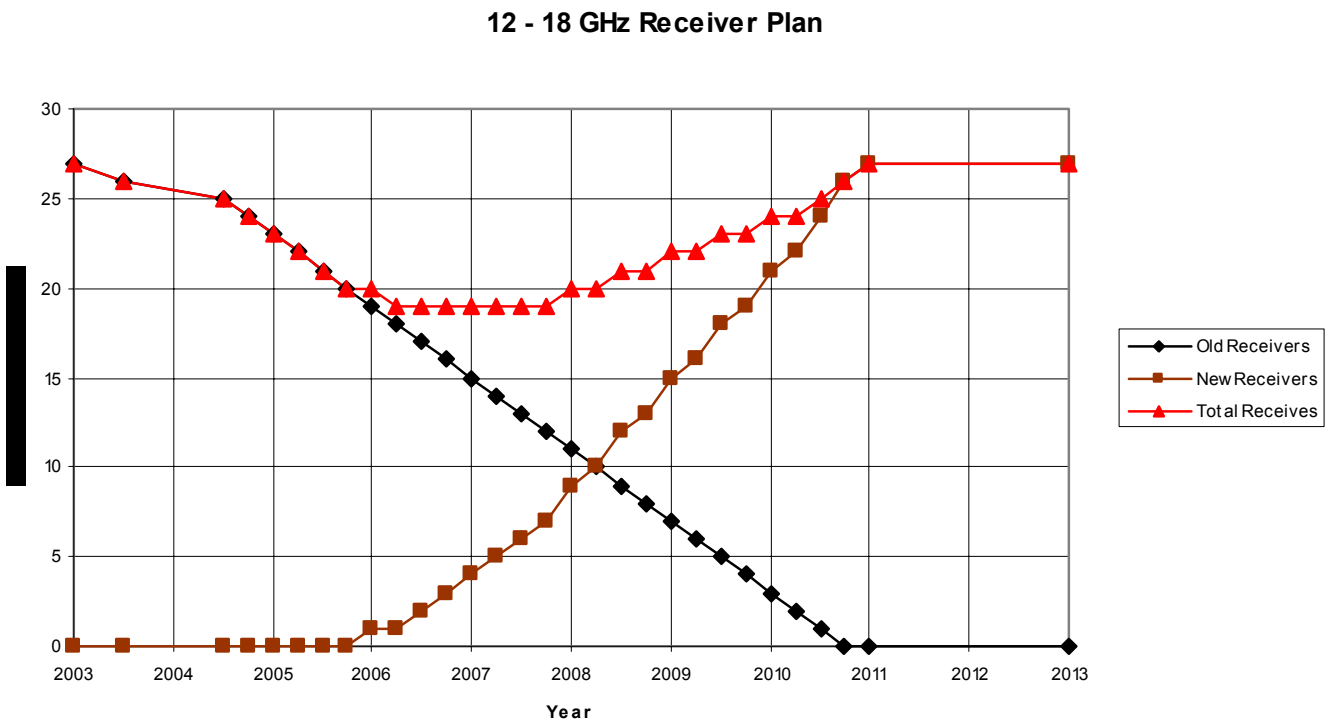
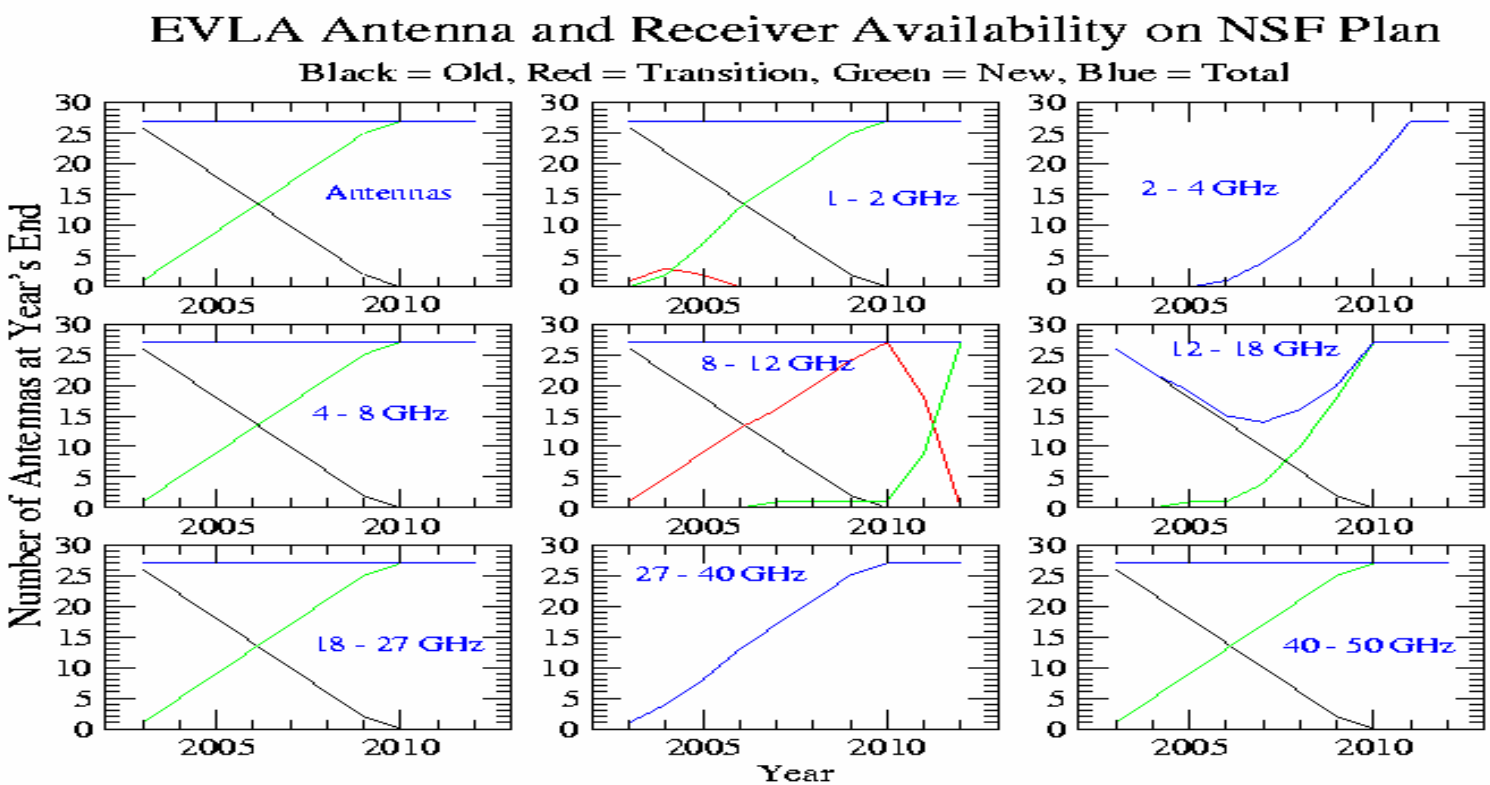
Receiver Schedule