1.27mm Micro-D and D-Sub Connectors and Hoods

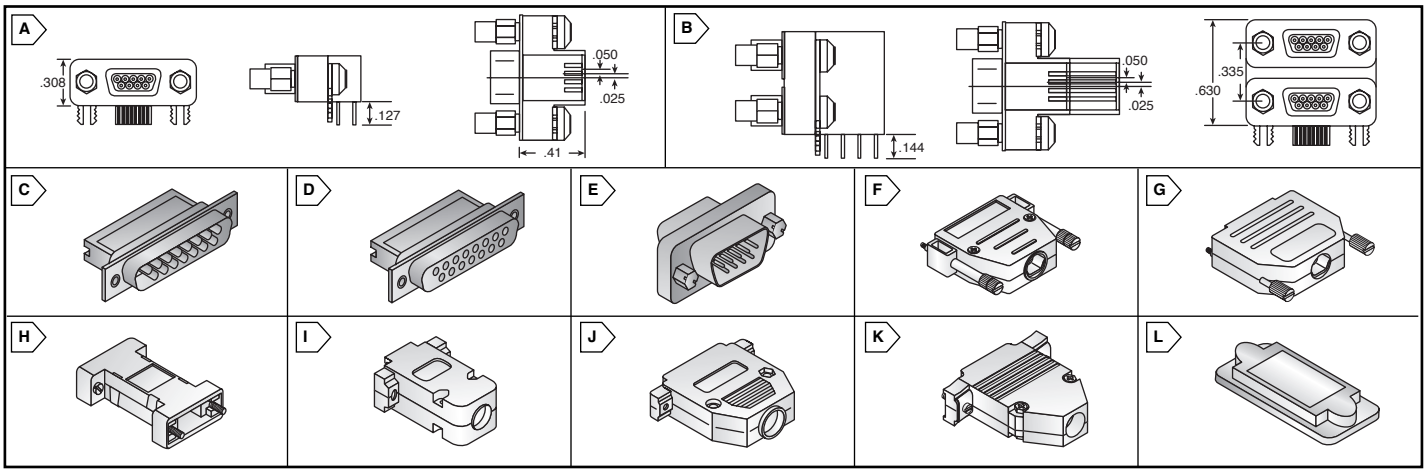

molex 1.27MM COMMERCIAL MICRO-D CONNECTORS

Commercial Micro-D Plug, Right Angle

Economical solution for commercial applications requiring the density of a micro-miniature connector. Rugged commercial design with a metal interface and grounding tabs for improved mechanical and electrical shield conditions.

- Through hole
- Housing: Shell - nickel-plated 1008LC steel; Insulator - LCP, UL94V-0
- Contact: Pin - gold-plated beryllium copper
- Color: Black
- Current: 3.0A
- Voltage: 350V
- Jackpost: Stainless steel
- Temperature: -55 to +125°C
- PCB Mount

For quantities of 50 and up, call for quote.

MOUSER STOCK NO.	Molex Part No.	Fig.	No. of Positions	Price Each 1	10	25
538-83611-9006	83611-9006	A	9	7.75	6.96	6.57
538-83612-9020	83612-9020	A	15	9.00	8.08	7.62
538-83614-9012	83614-9012	A	25	10.00	9.00	8.50
✻538-83619-9003	83619-9003	B	18	21.85	19.65	18.58

✻Dual Stacked; Housing : PPS Polyphenylene Sulfide; mates with 9 position Receptical Kit

Commercial Micro D Cable Receptacle Kits

Economical solution for commercial applications requiring the density of a micro-miniature connector. "Crimp and poke" configuration designed for hand or semi-automatic crimping. Order contacts separately.

- Color: Black
- Housing: Shell - Nickel-plated 1008LC Steel Insulator - LCP, UL94V-0
- Voltage: 350V
- Current: 3.0A
- AWG: 26, 28
- Boot: Santoprene
- Jackscrew: Stainless steel

For quantities of 50 and up, call for quote.

MOUSER STOCK NO.	Molex Part No.	Fig.	No. of Positions	Price Each 1	10	25
538-83421-9014	83421-9014	- -	9	5.40	4.86	4.60
538-83422-9014	83422-9014	- -	15	11.16	10.20	9.40
538-83424-9014	83424-9014	- -	25	6.70	6.03	5.70

Contact

- Use with Kits

For quantities of 1000 and up, call for quote.

MOUSER STOCK NO.	Molex Part No.	Price Each 1	100	500
538-83000-0083	83000-0083	.35	.30	.26

Crimp Tool for Contact

For quantities of 10 and up, call for quote.

MOUSER STOCK NO.	Molex Part No.	Price Each 1	5
538-63811-1400	63811-1400	225.97	197.73

KOBICONN IDC FLAT CABLE D-SUB CONNECTORS

Phosphor bronze contacts with gold plate over nickel, insulation displacement D-Subs provide added speed and convenience of mass termination.

Features: • Metal shell • Standard .050 pitch • Insulator color: black

For quantities of 500 and up, call for quote.

MOUSER STOCK NO.	Fig.	No. of Contacts	Type	Price Each 1	10	100
156-2609	C	9	Plug	2.17	1.45	1.32
156-2615	C	15	Plug	2.44	1.63	1.49
156-2625	C	25	Plug	2.61	1.74	1.58
156-2637	C	37	Plug	4.81	3.70	3.36
156-2709	D	9	Receptacle	2.17	1.45	1.32
156-2715	D	15	Receptacle	2.45	1.63	1.48
156-2725	D	25	Receptacle	2.61	1.74	1.58
156-2737	D	37	Receptacle	4.81	3.70	3.36

KOBICONN COMPACT SIZE GENDER CHANGERS

- Brass contacts gold plated over nickel
- 3 Amp
- 4-40 Hex Screw
- Temperature range: -55 to +105°C

For quantities of 500 and up, call for quote.

157-0300	E	9	Male/male	3.06	2.48	2.25
157-0302	E	9	Female/female	3.10	2.59	2.17
157-0304	E	15	Male/male	3.09	2.81	2.55
157-0306	E	15	Female/female	3.09	2.81	2.55
157-0308	E	25	Male/male	3.20	2.92	2.65
157-0310	E	25	Female/female	3.20	2.92	2.65

KOBICONN D-SUB HOODS

2 Piece Hoods with Screw Locks

- Plastic, Black ABS

For quantities of 500 and up, call for quote.

MOUSER STOCK NO.	Fig.	Shell Size	Description	Price Each 1	10	100
152-1309	F	DB9	2 pc plastic hood w/lock screws	2.51	2.09	1.90
152-1315	F	DB15	2 pc plastic hood w/lock screws	2.59	2.16	1.96
152-1325	F	DB25	2 pc plastic hood w/lock screws	2.63	2.19	1.99
152-1337	F	DB37	2 pc plastic hood w/lock screws	2.89	2.41	2.19
152-1350	F	DB50	2 pc plastic hood w/lock screws	2.89	2.41	2.19

Hinged Construction with Jack Screws

- Side snap lock • Black • Polypropylene

For quantities of 500 and up, call for quote.

MOUSER STOCK NO.	Fig.	Shell Size	Length (in.)	Width (in.)	Price Each 1	10	100
152-9009-E	G	DB9	1.31	1.33	1.39	1.08	.98
152-9015-E	G	DB15	1.29	1.66	1.39	1.08	.98
152-9025-E	G	DB25	1.44	2.22	1.39	1.08	.98
152-9037-E	G	DB37	1.54	2.85	1.87	1.44	1.30

Custom Adapter Housings

A two piece plastic housing designed for custom applications requiring the use of two D-sub connectors. Applications include custom jumper boxes and interconnects. Connectors are not included.

Features:

- All plastic construction
- Snap together assembly
- Connector screws included

For quantities of 500 and up, call for quote.

MOUSER STOCK NO.	Fig.	Shell Size	Color	Description	Price Each 1	10	100
157-4000	H	DB25/DB25	Black	with screws	1.10	.85	.76
157-4001	H	DB9/DB9	Black	with screws	1.10	.85	.76
157-4002	H	DB9/DB25	Gray	with screws	1.10	.85	.76
157-4003	H	DB25/DB25	Gray	with screws	1.10	.85	.76

Standard Hoods

Features:

- Designed to fit our 152 and 156 series connectors
- Straight cable exit
- Complete with screw, retainer, and side screws.

For quantities of 500 and up, call for quote.

MOUSER STOCK NO.	Fig.	Shell Size	Description	Price Each 1	10	100
Economy Plastic Locking Hoods						
156-2009-E	I	DB9	Gray locking hood	.65	.50	.45
156-2010-E	I	DB9	Black locking hood	.65	.50	.45
156-2015-E	J	DB15	Gray locking hood	.65	.50	.45
156-2025-E	J	DB25	Gray locking hood	.65	.50	.45
RFI/EMI Shielded Metallized Plastic Hoods						
156-3009-E	I	DB9	Nickel over copper plating	1.09	.91	.83
156-3015-E	J	DB15	Nickel over copper plating	1.21	1.01	.92
156-3025-E	J	DB25	Nickel over copper plating	1.21	1.01	.92
156-3037-E	J	DB37	Nickel over copper plating	2.05	1.71	1.55
RFI/EMI Shielded Metal Locking Hoods						
156-4109	K	DB9	Clear zinc chromate finish	2.38	1.98	1.80
156-4115	K	DB15	Clear zinc chromate finish	3.06	2.51	2.28
156-4125	K	DB25	Clear zinc chromate finish	3.59	2.76	2.51

KOBICONN EMI / DUST COVERS

For quantities of 500 and up, call for quote.

MOUSER STOCK NO.	Fig.	C olor	No. of Contacts	Type	Price Each 1	10	100
152-09FR	L	Red	9	female	1.25	1.05	.95
152-15FR	L	Red	15	female	1.25	1.05	.95
152-25FR	L	Red	25	female	1.25	1.05	.95
152-09MB	L	Blue	9	male	1.25	1.05	.95
152-15MB	L	Blue	15	male	1.25	1.05	.95
152-25MB	L	Blue	25	male	1.25	1.05	.95

© Copyright 2007 Mouser Electronics